Maryhill Road
St. Charles Street to the Waterloo/Wellington Boundary, Woolwich Township

Road and Bridge Improvements

Region of Waterloo

MTE

Public Meeting

May 27, 2026

Scope of Work

2027 – 2028 Maryhill Road and Bridge Improvements

- Full reconstruction of the pavement within the village
- Replacement and upsizing of storm sewers
- Replacement of curbs and driveway aprons / accesses
- Sidewalks on both sides of the road between St. Charles Street and Notre Dame Avenue
- Pedestrian crossing and median near Notre Dame Avenue
- Space for roadside parking and on-road cycling
- Bridge rehabilitation at Hopewell Creek including, street lighting and decorative steel / concrete walls
- Guiderail replacement at Hopewell Creek Bridge
- Improvements to the rural roadway and shoulders

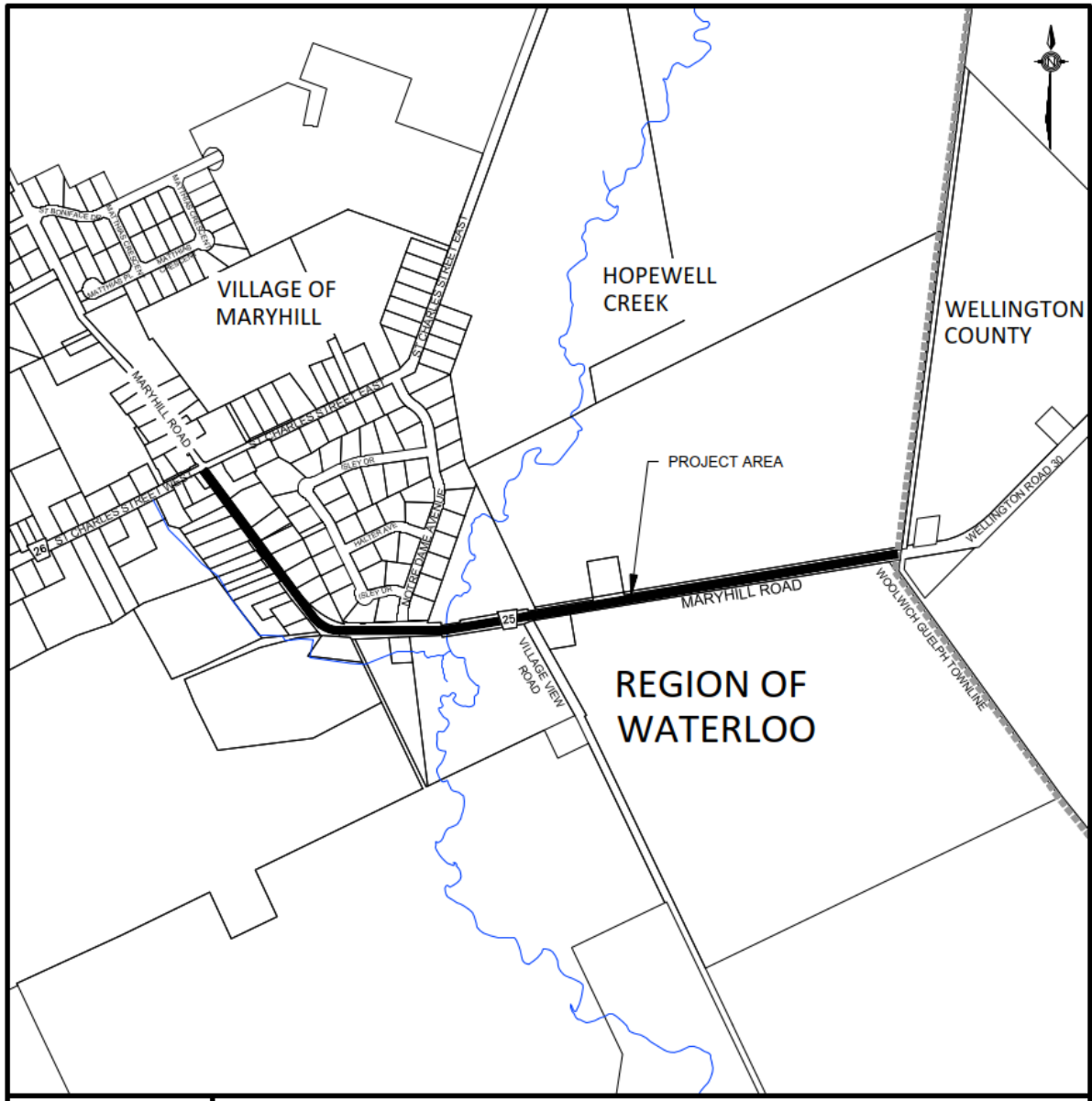

Region of Waterloo

Maryhill Road
St. Charles Street to
Waterloo/ Wellington Boundary

Planning and Design Process

What work has been done so far?

- Preliminary engineering studies (topographic survey, geotechnical investigation, private well survey and hydrology study – Hopewell Creek)
- Assessed design options and developed preliminary road designs
- Consulted with Grand River Conservation Authority (GRCA) and prepared storm sewer designs
- Reviewed potential watermain servicing with the Township - currently excluded from the scope of work based on community feedback (2023)

Preferred Road Design

Active Transportation

- **Sidewalks:** Both sides of Maryhill Road from St. Charles Street to Notre Dame Avenue
- **Pedestrian Crossing:** Pedestrian refuge island located just east of Notre Dame Avenue
- **Space for Cyclists:** Extending throughout the project area
- **Street lighting:** Existing streetlights will be reviewed and additional lights added

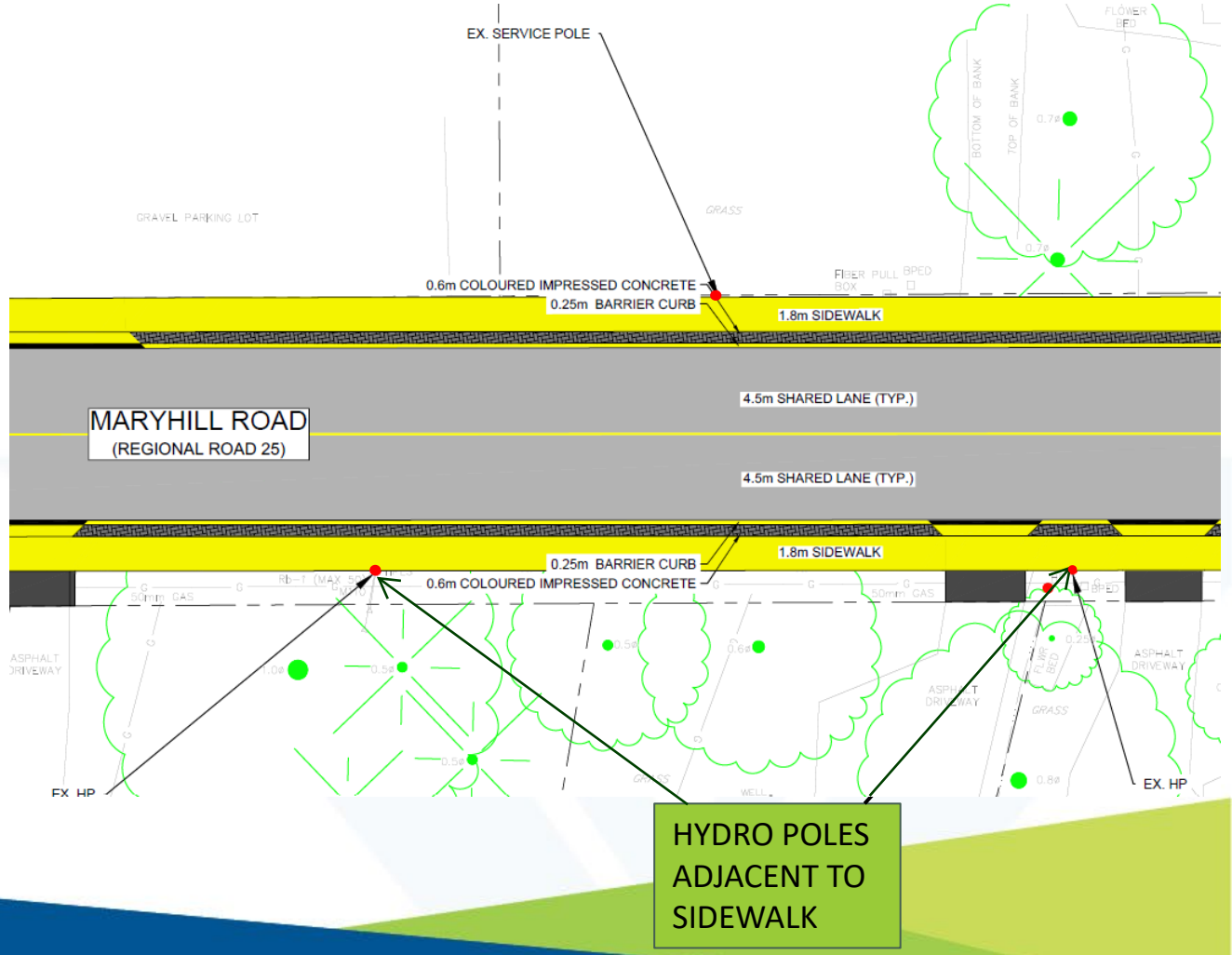

Maryhill Road Improvements

Preferred Road Design

Typical Cross-Section (Urban Section)

Maryhill Road (St. Charles Street to Notre Dame Avenue)

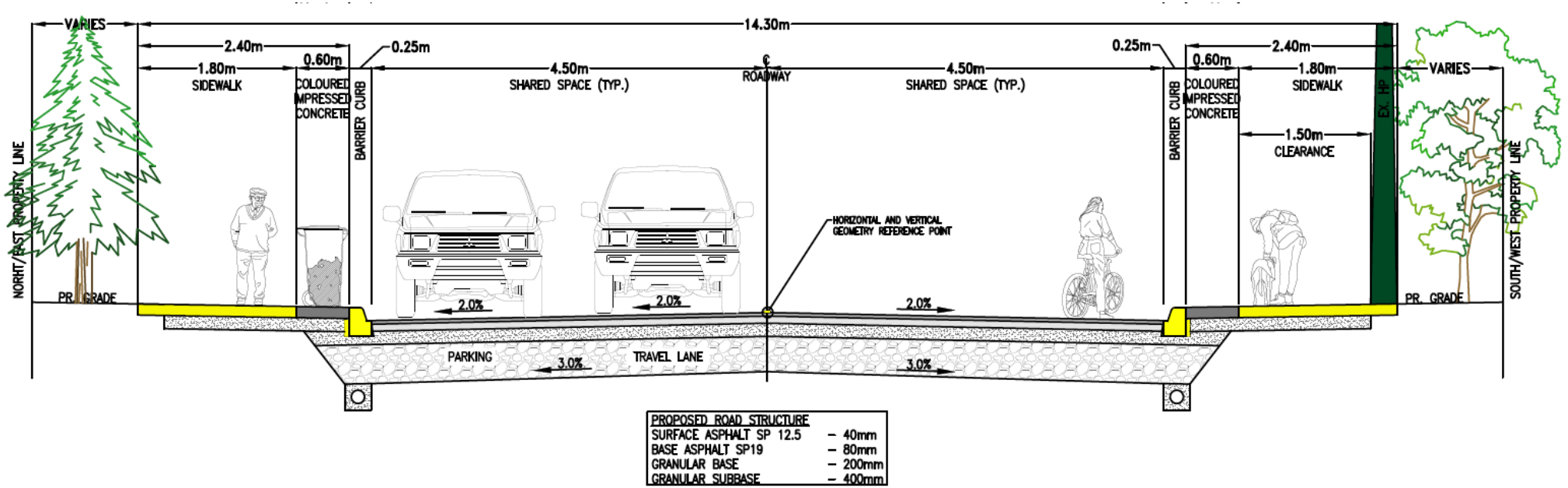

PROPOSED ROAD STRUCTURE	
SURFACE ASPHALT SP 12.5	– 40mm
BASE ASPHALT SP19	– 80mm
GRANULAR BASE	– 200mm
GRANULAR SUBBASE	– 400mm

MARYHILL ROAD - URBAN
FUNCTIONAL DESIGN

Preferred Road and Bridge Design

Typical Cross-Section

Maryhill Road at Hopewell Creek

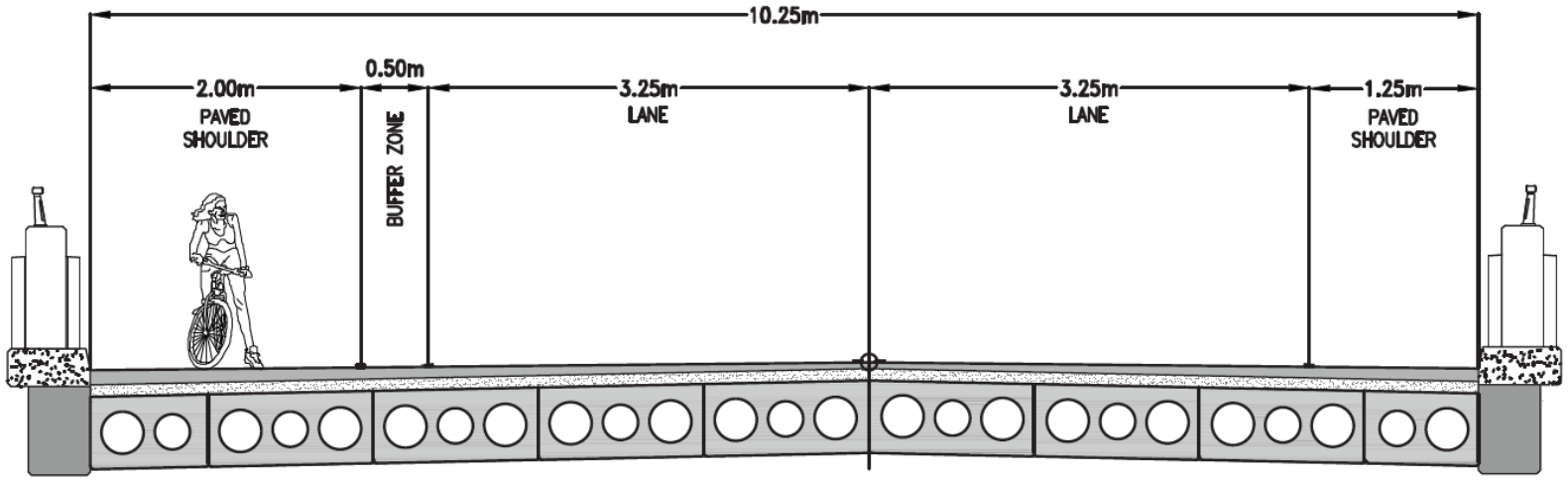

MARYHILL RD
BRIDGE CROSS SECTION
FUNCTIONAL DESIGN

Preferred Road Design

Typical Cross-Section (Rural Section)

Maryhill Road (Hopewell Creek to Village View Road

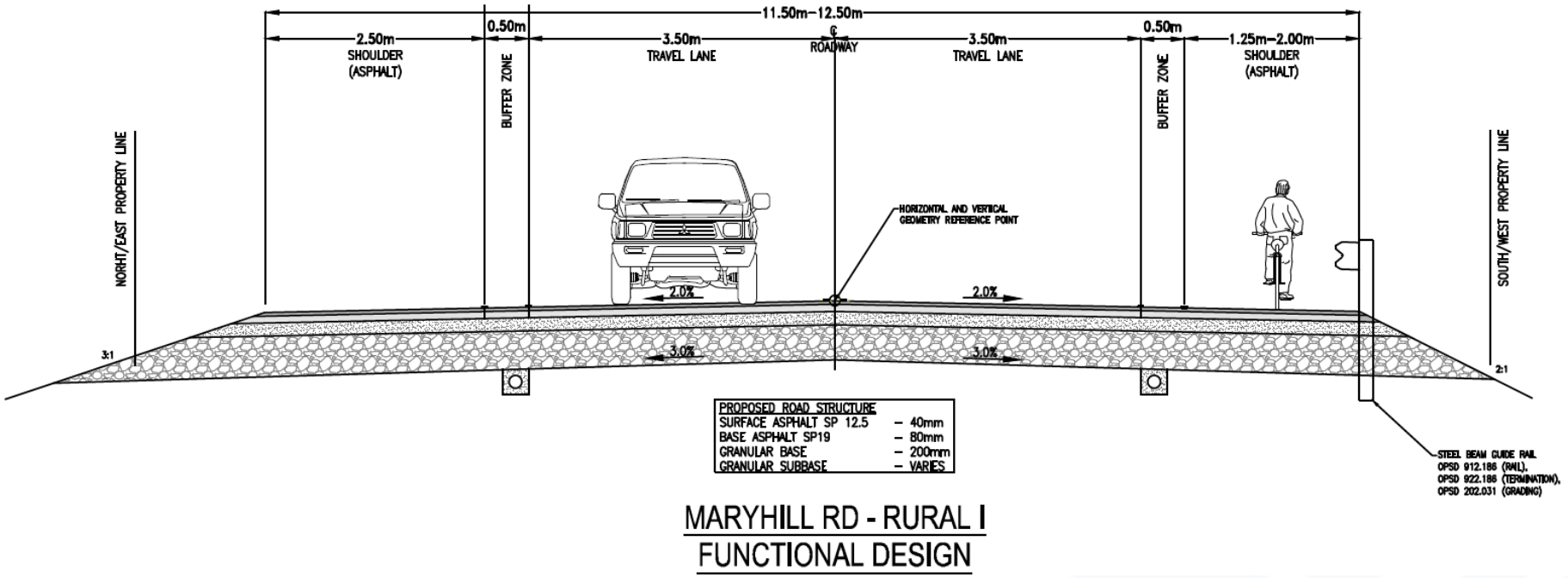

MARYHILL RD - RURAL I
FUNCTIONAL DESIGN

Preferred Road Design

Typical Cross-Section (Rural Section)

Maryhill Road (Village View Road to Waterloo/Wellington Boundary

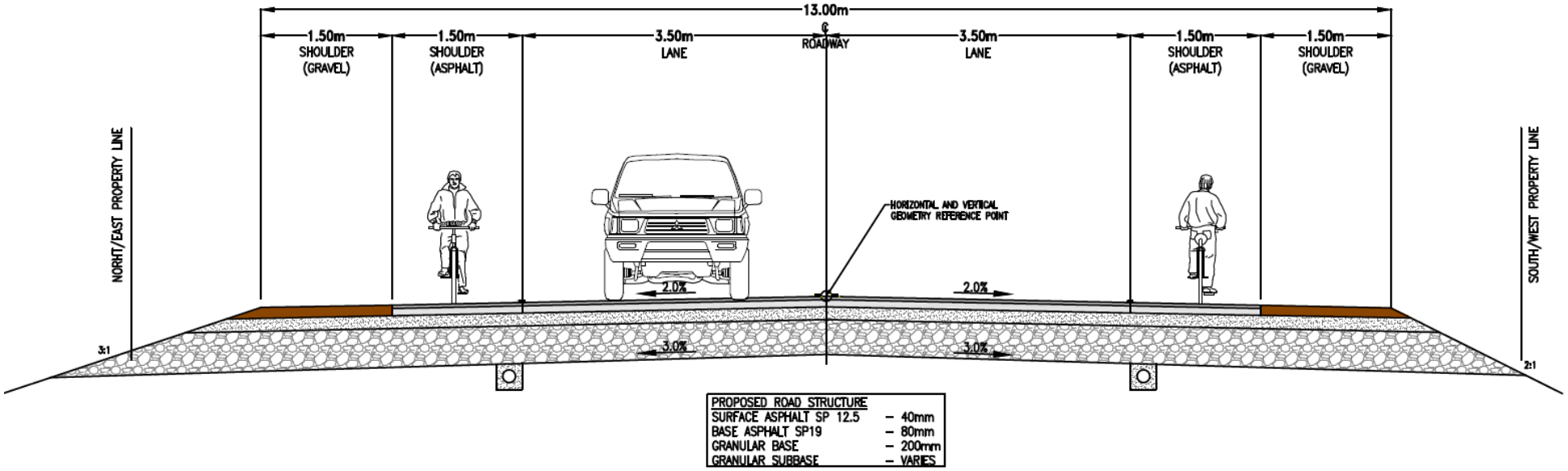

MARYHILL RD - RURAL II
FUNCTIONAL DESIGN

Preferred Road Design

Entrance to Village of Maryhill

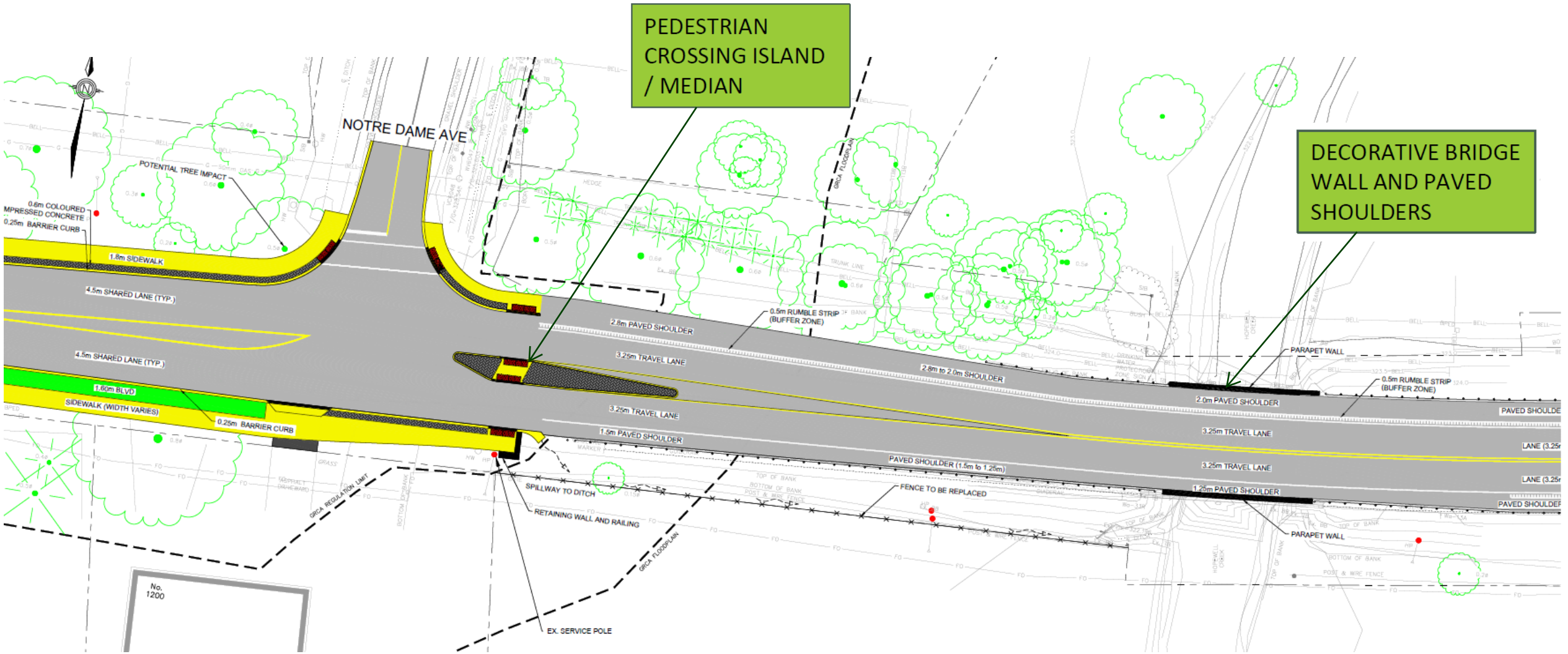

Proposed Bridge Improvements

- Hopewell Creek bridge will be rehabilitated to extend the service life of the bridge
- Surface repairs to the bridge abutments
- Replacement of the barriers and curbs on the bridge and wingwalls
- Replacement of the asphalt



Example of decorative railings and walls on a similar bridge – Church Street, Elmira

Rural Road Rehabilitation

- Rehabilitation and recycling of existing roadway
- Road paving and widening for bike lanes and shoulders (paved / gravel)
- Intersection and driveway improvements
- Installation of subdrains



Project Schedule

Next Steps



Public Review via EngageWR
May 27 – June 10

Project Update Region of Waterloo Committee Report
August 11

Final Design and Construction Phases
2026 – 2028