91-97 Milford Avenue

Functional Stormwater Management Report

Project Location:
91-97 Milford Avenue, Waterloo, ON

Prepared for:
Sugarbush Gardens Inc.
114 Roxborough Drive, Toronto, ON

Prepared by:
MTE Consultants
520 Bingemans Centre Drive
Kitchener, ON N2B 3X9

October 7, 2020

MTE File No.: 47850-100

Engineers, Scientists, Surveyors.

Contents

1.0 Introduction 1
2.0 Criteria 1
3.0 Methodology 1
4.0 Stormwater Management 2
4.1 Catchment Parameters 2
4.2 Water Quantity – Modelling Results 5
4.3 Water Quality Control 6
4.4 Erosion & Sediment Control 6
5.0 Conclusions And Recommendations 7

Figures

Figure 1 - Pre-Development Catchment Area 3
Figure 2 - Post-Development Catchment Areas 4

Tables

Table 4.1 - Catchment Parameters 2
Table 4.2 - Stage-Storage-Discharge Information 5
Table 4.3 - Summary Of Flows 6

Appendices

Appendix A Calculations
Appendix B MIDUSS Output

Reference Drawings

Removals Plan
MTE Drawing No. C1.1 ..... Appended Separately.

Functional Site Grading SWM Plan
MTE Drawing No. C2.1 ..... Appended Separately.

Functional Site Servicing Plan
MTE Drawing No. C2.2 ..... Appended Separately.

1.0 Introduction

MTE Consultants Inc. was retained by Sugarbush Gardens Inc. to complete the stormwater management design for the proposed stacked townhouse building to be constructed at 91-97 Milford Avenue in the City of Waterloo.

The site is located west of the intersection of Weber Street North and Milford Avenue. The property is bounded to the north by Milford Avenue, to the east and west by existing residential development, and to the south by St. David Catholic Secondary School. For exact location of the site refer to the key plan located on the enclosed engineering drawings.

The site currently consists of four townhouse buildings, complete with a private roadway around the four buildings. There is an existing landscaped courtyard in the middle of the site, which the four buildings currently back on to. The proposed development for the site is the construction of a fifth stacked townhouse building, located within the central landscaped area, complete with a new internal drive aisle off of the existing private roadway to access the proposed building.

This report addresses the stormwater management requirements set forth by the City of Waterloo and proposes a design which meets the requirements for the site. The functional site grading, servicing and stormwater management details for the site are illustrated on the enclosed MTE engineering drawings, C2.1 and C2.2.

2.0 Criteria

The stormwater management design criteria for the subject site, as established by the City of Waterloo, are as follows:

i) Attenuation of the post-development peak flows for the 5 and 100 year storm events to the pre-development (existing) peak flows; and,

ii) Implementation of water quality controls.

3.0 Methodology

In order to successfully complete the stormwater management design for this site, the following specific tasks were undertaken:

i) Calculated the allowable runoff rates using MIDUSS NET;

ii) Determined the percent impervious of the site and catchment parameters for inclusion in MIDUSS modelling;

iii) Calculated post-development runoff hydrographs using MIDUSS NET; and,

iv) Revised the site grades to attain the required storage for runoff control.

4.0 Stormwater Management

As noted in the pre-consultation comments received from the City of Waterloo, the existing site does not have any stormwater management control measures currently in place. The following stormwater management strategy has been developed to control the stormwater flow rate off site to the current rates or better, while also improving the current drainage patterns on the site. The intent of the proposed grading strategy is to disrupt the existing residential site as little as possible, while also improving the drainage patterns across the site. A small berm is proposed along the west and south property line to keep runoff generated on the site from being conveyed towards the existing residential lots, and instead directing it into the on-site storm sewer system.

4.1 Catchment Parameters

The following table summarizes the catchments used in the modelling of the site. The post development condition was separated into two catchment areas: the controlled area and the uncontrolled area. Figure 1.0 illustrates the limits of the pre-development catchment area. Figure 2.0 illustrates the limits of the post development catchment areas.

Table 4.1 - Catchment Parameters

#	Catchment	Area (ha)	% Impervious	Pervious CN	Impervious CN	Slope (%)	Flow Length (m)
Pre-Development Catchment Areas							
101	Total Site	1.75	39	75	98	3.0	80.0
Post Development Catchment Areas							
201	Controlled Area	1.29	65	75	98	3.0	50.0
202	Uncontrolled Area	0.46	38	75	98	3.0	40.0

A geotechnical investigation was not available for this development at the time this report was published. Therefore, a conservative value of 75 was used for the pervious CN.

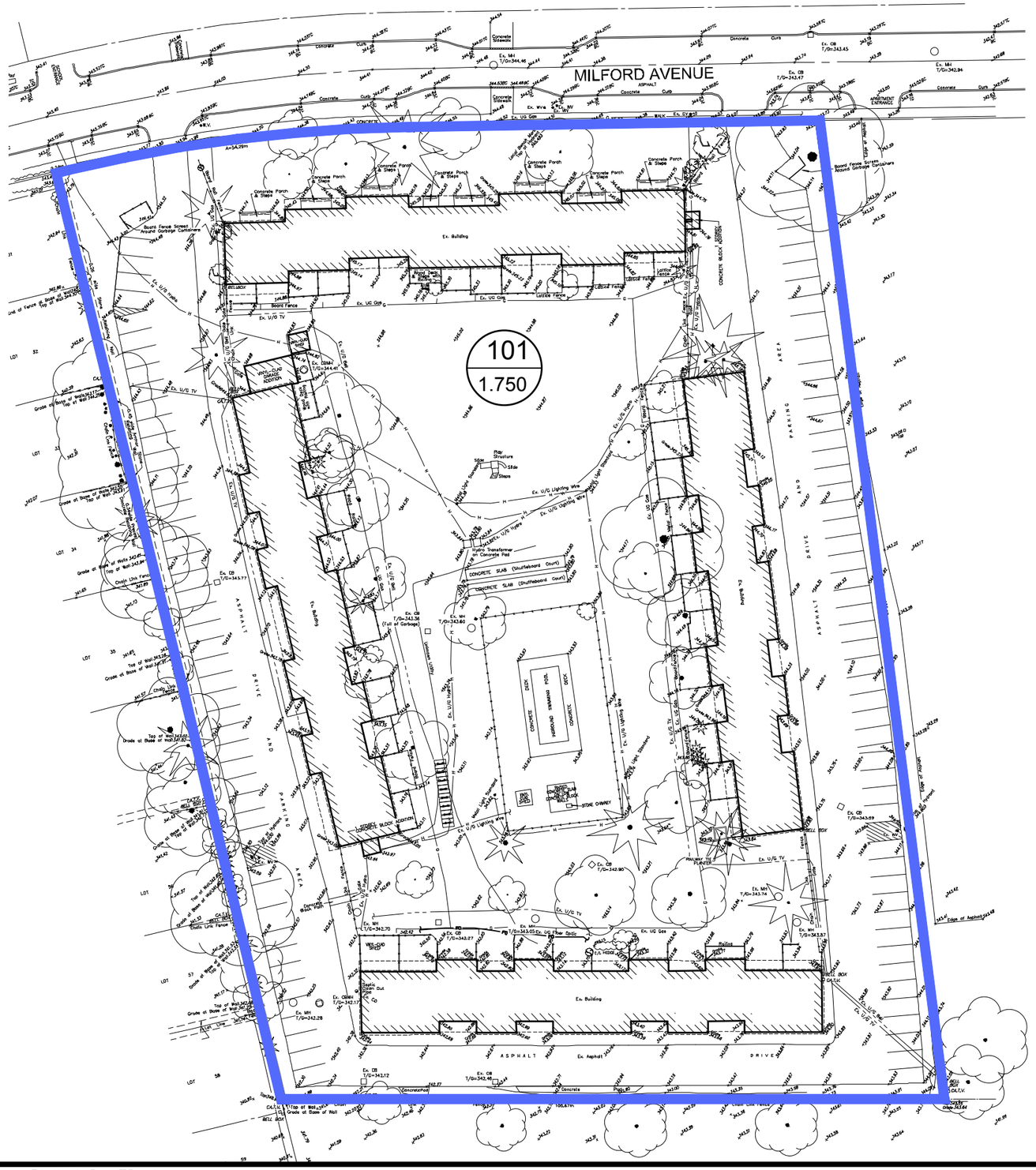
MILFORD AVENUE
101
1.750
Ex. Building
ASPHALT
PARKING AREA
DRIVE AND
CONCRETE
INGROUND SWIMMING POOL
DECK
STONE CHIMNEY
Ex. Asphalt
Ex. U/G TV
Ex. U/G Lighting Wire
Ex. U/G Hydro
Ex. U/G Gas
Ex. U/G Bell
Ex. U/G Signaling Wire
Ex. MH T/G=343.60
Ex. MH T/G=343.74
Ex. MH T/G=343.83
Ex. MH T/G=342.28
Ex. CB T/G=343.45
Ex. CB T/G=343.47
Ex. CB T/G=343.77
Ex. CB T/G=343.36 (Full of Garbage)
Ex. CB T/G=343.09
Ex. CB T/G=342.90
Ex. CB T/G=343.05
Ex. CB T/G=342.46
Ex. CB T/G=342.12
Ex. Catch T/G=342.17
Ex. MH T/G=343.70
Ex. MH T/G=343.03
Ex. MH T/G=344.46
Ex. MH T/G=344.41
Ex. WV
Ex. Hydro
Ex. Gas
Ex. Bell
Ex. Sanitary MH
Ex. Storm MH
Ex. Catch Basin
Ex. Curb Inlet
Ex. Hydro Pole
Ex. Light Standard
Ex. Sign
Ex. Tree
Ex. Shrub
Ex. Fence
Ex. Retaining Wall
Ex. Gate
Ex. Steps
Ex. Ramp
Ex. Concrete Pad
Ex. Concrete Sidewalk
Ex. Concrete Curb
Ex. Concrete Porch & Steps
Ex. Concrete Steps
Ex. Concrete Ramp
Ex. Asphalt Ramp
Ex. Asphalt Curb
Ex. Asphalt Sidewalk
Ex. Asphalt Steps
Ex. Concrete Block Addition
Ex. Concrete Block Addition
Ex. Wood Deck
Ex. Wood Deck & Steps
Ex. Wood Deck & Ramp

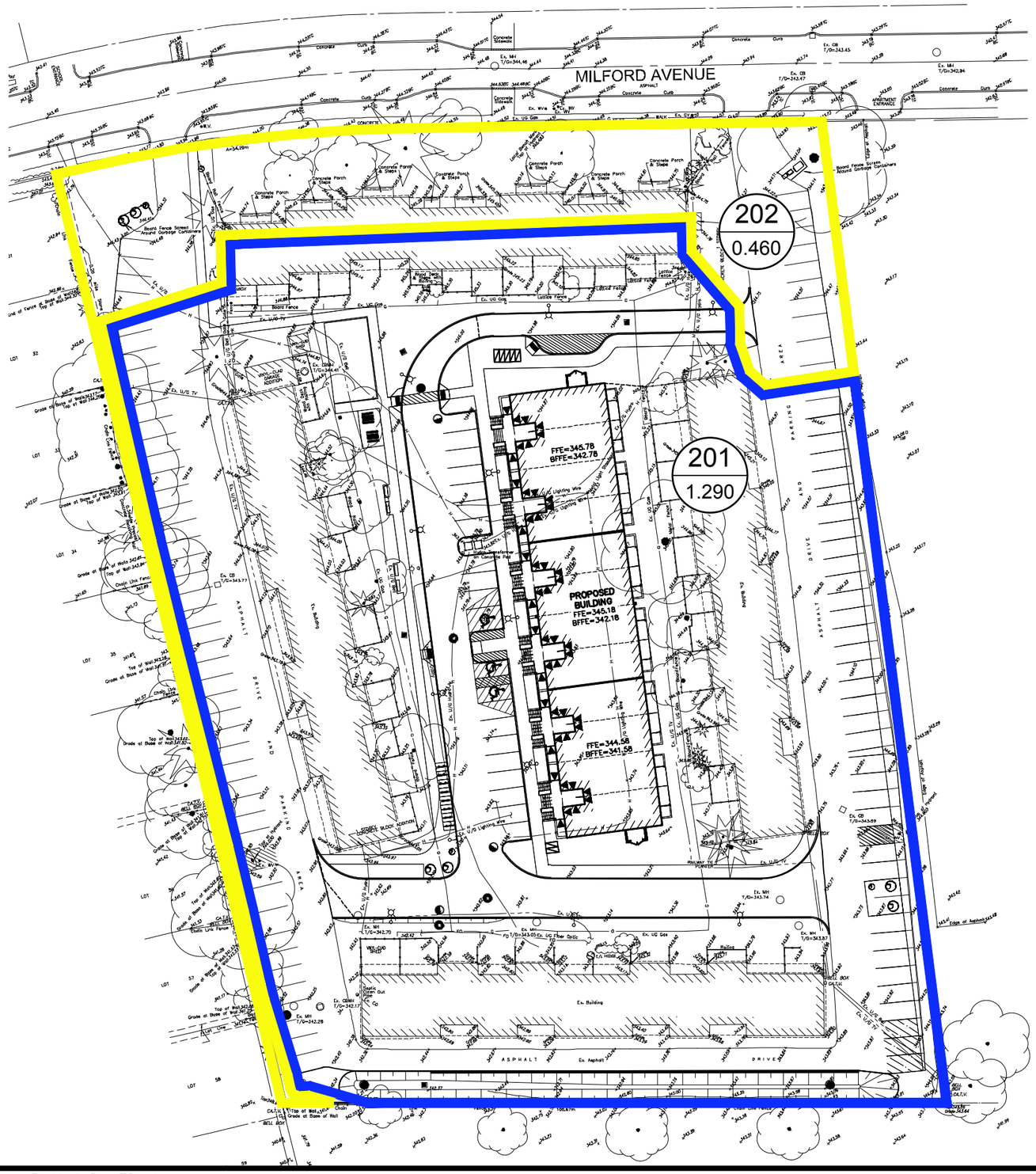

LEGEND

CATCHMENT 201

CATCHMENT 202

201 — SUB-CATCHMENT NUMBER

1.290 — AREA (ha.)

FIGURE 2.0 Date: OCT.07/20 Scale: 1:750

POST DEVELOPMENT CATCHMENT AREAS

MTE Engineers, Scientists, Surveyors

Project No.: 47850-100

4.2 Water Quantity – Modelling Results

In order to achieve the stormwater management requirements for the site, runoff generated from the controlled area will be conveyed to the existing catchbasin-manhole located in the south west corner of the site, wherein the flow will be controlled with the installation of a 200 mm diameter on-line orifice plate on the existing outlet pipe and a 4.0m wide weir. Storage volume for the orifice and the weir will be provided within a new stormwater detention ditch that is proposed along the south property line, and also within the below grade storm sewer pipes. The maximum depth of ponding permitted within the stormwater detention ditch by grading is 0.51 metres.

The flow equations for the orifice and weir are included in Appendix A. Refer to Appendix B for the MIDUSS NET output. The following table illustrates the stage-storage-discharge relationship of the storm system.

Table 4.2 - Stage-Storage-Discharge Information

Elevation (m)	Head (m)	Orifice/Weir Flow (m^3/s)	Volume (m^3)	Remarks
340.42	0.00	0.0000	0.0	200 mm dia. Orifice invert
341.72	1.30	0.0947	0.5	Top of grate CB9
341.82	1.40	0.0987	4.5	Contour
341.92	1.50	0.1025	14.6	Contour
342.02	1.60	0.1062	29.2	Contour
342.12	1.70	0.1097	47.5	Contour
342.22	1.80	0.1132	69.0	Contour
342.32	1.90	0.1165	99.2	4.0m wide weir
342.42	2.00	0.3139	300.0	Contour

With the addition of the 200 mm diameter orifice plate and the 4.0 m wide weir, the post development runoff from the controlled portion of the site for the 5 and 100 year storm events is controlled to 0.114 m^3/s and 0.250 m^3/s, respectively. The following table summarizes the flows generated by the whole site.

Table 4.3 - Summary of Flows

Modelling Condition	5 year Storm Event (m^3/s)	100 year Storm Event (m^3/s)
Pre-development	0.192	0.396
Post Development	0.159	0.345

The maximum ponding elevation for the 5 year storm event is 342.25. This represents 48.0 cm of ponding depth within the detention ditch. For the 100 year storm event, the maximum ponding elevation is 342.39. This represents 51.0 cm of ponding depth within the detention ditch, with 7.0 cm flowing over the weir.

4.3 Water Quality Control

A Stormceptor Model EF6 will be installed on the existing storm sewer system to provide water quality control. The chosen unit is expected to provide Level 2 water quality control. (Refer to Appendix A for the sizing output from the Stormceptor Expert program.) The Stormceptor will require regular annual maintenance to ensure it is operating properly. The owner will enter into a maintenance agreement with a suitable contractor to complete this work. In addition, all the storm structures will have a 600 mm sump.

4.4 Erosion & Sediment Control

In order to minimize the effects of erosion during the grading of the site, sediment control fencing will be installed: as shown on the enclosed engineering drawing, around any stockpiles and around the catchbasins during construction. Any sediment that is tracked onto the road way during the course of construction will be cleaned by the contractor.

5.0 Conclusions and Recommendations

Based on the foregoing analysis, it is concluded that:

i) the proposed stormwater management design provides adequate attenuation of the 5 and 100 year storm events and provides adequate water quality control; and,

ii) upon completion of construction, the site will conform to the design criteria specified by the City of Waterloo.

It is recommended that:

i) the site grading be undertaken according to the proposed elevations, details and erosion control measures shown on the enclosed engineering drawings;

ii) the stormwater management facilities be installed as detailed on the enclosed engineering drawings; and,

iii) the stormwater management facilities be inspected by MTE Consultants Inc. during construction and certified to the City of Waterloo upon completion.

All of which is respectfully submitted,

MTE CONSULTANTS INC.

47850-100



Chelsea Hiebert, P.Eng.
Design Engineer
519-743-6500 ext. 1285
chiebert@mte85.com

Lynn Ingram, P.Eng.
Design Engineer
519-743-6500 ext. 1381
lingram@mte85.com

CAH:scm
\\mte85.local\mte\Proj_Mgmt\47850\100\Reports\rpt_2020-10-07_SWM.doc

Appendix A

Calculations

CALCULATIONS

Orifice Equation (MIDUSS NET)

$Q = C_c \, p/4 \, D5 \, \text{sqrt}(2g(H-2/3D))$

where C_c coefficient of contraction
- H head relative to the invert of the orifice
- D orifice diameter
- g gravitational acceleration

Weir Equation (MIDUSS NET)

$Q_{cr} = B \, \text{sqrt}(g) \, y_{cr}^{3/2}$ where $y_{cr} = 2/3 \, (H-Z)$

where
- B weir breadth
- g gravitational acceleration
- H head relative to the invert of the weir
- Z weir sill elevation

Stormceptor®

FORTERRA

Stormceptor® EF Sizing Report

STORMCEPTOR®
ESTIMATED NET ANNUAL SEDIMENT (TSS) LOAD REDUCTION

09/28/2020

Province:	Ontario
City:	Waterloo
Nearest Rainfall Station:	WATERLOO WELLINGTON AP
NCDC Rainfall Station Id:	9387
Years of Rainfall Data:	34

Site Name:	91-97 Milford Ave

Drainage Area (ha):	1.29
% Imperviousness:	65.00

Runoff Coefficient 'c': 0.69

Particle Size Distribution:	Fine
Target TSS Removal (%):	70.0

Required Water Quality Runoff Volume Capture (%):	90.00
Estimated Water Quality Flow Rate (L/s):	34.87
Oil / Fuel Spill Risk Site?	No
Upstream Flow Control?	No
Peak Conveyance (maximum) Flow Rate (L/s):	
Site Sediment Transport Rate (kg/ha/yr):	

Project Name:	91-97 Milford Ave
Project Number:	33286
Designer Name:	Chelsea Hiebert
Designer Company:	MTE Consultants Inc.
Designer Email:	chiebert@mte85.com
Designer Phone:	519-743-6500
EOR Name:	
EOR Company:	
EOR Email:	
EOR Phone:	

Net Annual Sediment (TSS) Load Reduction Sizing Summary

Stormceptor Model	TSS Removal Provided (%)
EF4	69
EF6	79
EF8	83
EF10	86
EF12	88

Recommended Stormceptor EF Model: EF6

Estimated Net Annual Sediment (TSS) Load Reduction (%): 79

Water Quality Runoff Volume Capture (%): > 90

imbrium

THIRD-PARTY TESTING AND VERIFICATION

►**Stormceptor® EF and Stormceptor® EFO** are the latest evolutions in the Stormceptor® oil-grit separator (OGS) technology series, and are designed to remove a wide variety of pollutants from stormwater and snowmelt runoff. These technologies have been third-party tested in accordance with the Canadian ETV **Procedure for Laboratory Testing of Oil-Grit Separators** and performance has been third-party verified in accordance with the **ISO 14034 Environmental Technology Verification (ETV)** protocol.

PERFORMANCE

►**Stormceptor® EF and EFO** remove stormwater pollutants through gravity separation and floatation, and feature a patent-pending design that generates positive removal of total suspended solids (TSS) throughout each storm event, including high-intensity storms. Captured pollutants include sediment, free oils, and sediment-bound pollutants such as nutrients, heavy metals, and petroleum hydrocarbons. Stormceptor is sized to remove a high level of TSS from the frequent rainfall events that contribute the vast majority of annual runoff volume and pollutant load. The technology incorporates an internal bypass to convey excessive stormwater flows from high-intensity storms through the device without resuspension and washout (scour) of previously captured pollutants. Proper routine maintenance ensures high pollutant removal performance and protection of downstream waterwavs.

PARTICLE SIZE DISTRIBUTION (PSD)

►The **Canadian ETV PSD** shown in the table below was used, or in part, for this sizing. This is the identical PSD that is referenced in the Canadian ETV ***Procedure for Laboratory Testing of Oil-Grit Separators*** for both sediment removal testing and scour testing. The Canadian ETV PSD contains a wide range of particle sizes in the sand and silt fractions, and is considered reasonably representative of the particle size fractions found in typical urban stormwater runoff.

Particle Size (µm)	Percent Less Than	Particle Size Fraction (µm)	Percent
1000	100	500-1000	5
500	95	250-500	5
250	90	150-250	15
150	75	100-150	15
100	60	75-100	10
75	50	50-75	5
50	45	20-50	10
20	35	8-20	15
8	20	5-8	10
5	10	2-5	5
2	5	<2	5

Rainfall Intensity (mm / hr)	Percent Rainfall Volume (%)	Cumulative Rainfall Volume (%)	Flow Rate (L/s)	Flow Rate (L/min)	Surface Loading Rate (L/min/m²)	Removal Efficiency (%)	Incremental Removal (%)	Cumulative Removal (%)
1	49.9	49.9	2.47	148.0	56.0	92	45.9	45.9
2	7.0	56.9	4.95	297.0	113.0	86	6.0	51.9
3	7.0	63.9	7.42	445.0	169.0	79	5.5	57.5
4	4.4	68.3	9.90	594.0	226.0	74	3.3	60.7
5	3.2	71.5	12.37	742.0	282.0	69	2.2	62.9
6	3.5	75.0	14.85	891.0	339.0	64	2.3	65.2
7	3.1	78.1	17.32	1039.0	395.0	59	1.8	67.0
8	2.3	80.4	19.80	1188.0	452.0	58	1.3	68.3
9	1.9	82.3	22.27	1336.0	508.0	57	1.1	69.4
10	2.0	84.3	24.74	1485.0	565.0	56	1.1	70.5
11	1.8	86.1	27.22	1633.0	621.0	56	1.0	71.5
12	1.4	87.5	29.69	1782.0	677.0	56	0.8	72.3
13	1.3	88.8	32.17	1930.0	734.0	55	0.7	73.0
14	1.1	89.9	34.64	2079.0	790.0	55	0.6	73.6
15	1.1	91.0	37.12	2227.0	847.0	55	0.6	74.2
16	0.8	91.8	39.59	2375.0	903.0	55	0.4	74.7
17	1.0	92.8	42.07	2524.0	960.0	54	0.5	75.2
18	0.9	93.7	44.54	2672.0	1016.0	54	0.5	75.7
19	0.7	94.4	47.02	2821.0	1073.0	55	0.4	76.1
20	0.8	95.2	49.49	2969.0	1129.0	56	0.4	76.5
21	0.6	95.8	51.96	3118.0	1185.0	56	0.3	76.9
22	0.5	96.3	54.44	3266.0	1242.0	57	0.3	77.2
23	0.4	96.7	56.91	3415.0	1298.0	58	0.2	77.4
24	0.2	96.9	59.39	3563.0	1355.0	58	0.1	77.5
25	0.2	97.1	61.86	3712.0	1411.0	59	0.1	77.6

Rainfall Intensity (mm / hr)	Percent Rainfall Volume (%)	Cumulative Rainfall Volume (%)	Flow Rate (L/s)	Flow Rate (L/min)	Surface Loading Rate (L/min/m²)	Removal Efficiency (%)	Incremental Removal (%)	Cumulative Removal (%)
26	0.3	97.4	64.34	3860.0	1468.0	57	0.2	77.8
27	0.2	97.6	66.81	4009.0	1524.0	54	0.1	77.9
28	0.1	97.7	69.29	4157.0	1581.0	52	0.1	78.0
29	0.2	97.9	71.76	4306.0	1637.0	51	0.1	78.1
30	0.1	98.0	74.23	4454.0	1694.0	49	0.0	78.1
31	0.2	98.2	76.71	4603.0	1750.0	47	0.1	78.2
32	0.0	98.2	79.18	4751.0	1806.0	46	0.0	78.2
33	0.1	98.3	81.66	4899.0	1863.0	44	0.0	78.2
34	0.1	98.4	84.13	5048.0	1919.0	43	0.0	78.3
35	0.0	98.4	86.61	5196.0	1976.0	42	0.0	78.3
36	0.1	98.5	89.08	5345.0	2032.0	41	0.0	78.3
37	0.0	98.5	91.56	5493.0	2089.0	40	0.0	78.3
38	0.2	98.7	94.03	5642.0	2145.0	39	0.1	78.4
39	0.2	98.9	96.50	5790.0	2202.0	38	0.1	78.5
40	0.1	99.0	98.98	5939.0	2258.0	37	0.0	78.5
41	0.1	99.1	101.45	6087.0	2315.0	36	0.0	78.6
42	0.0	99.1	103.93	6236.0	2371.0	35	0.0	78.6
43	0.0	99.1	106.40	6384.0	2427.0	34	0.0	78.6
44	0.1	99.2	108.88	6533.0	2484.0	33	0.0	78.6
45	0.0	99.2	111.35	6681.0	2540.0	33	0.0	78.6
46	0.1	99.3	113.83	6830.0	2597.0	32	0.0	78.6
47	0.0	99.3	116.30	6978.0	2653.0	32	0.0	78.6
48	0.0	99.3	118.77	7126.0	2710.0	31	0.0	78.6
49	0.0	99.3	121.25	7275.0	2766.0	31	0.0	78.6
50	0.1	99.4	123.72	7423.0	2823.0	30	0.0	78.7
						Estimated Net Annual Sediment (TSS) Load Reduction =		**79 %**

imbrium

RAINFALL DATA FROM WATERLOO WELLINGTON AP RAINFALL STATION

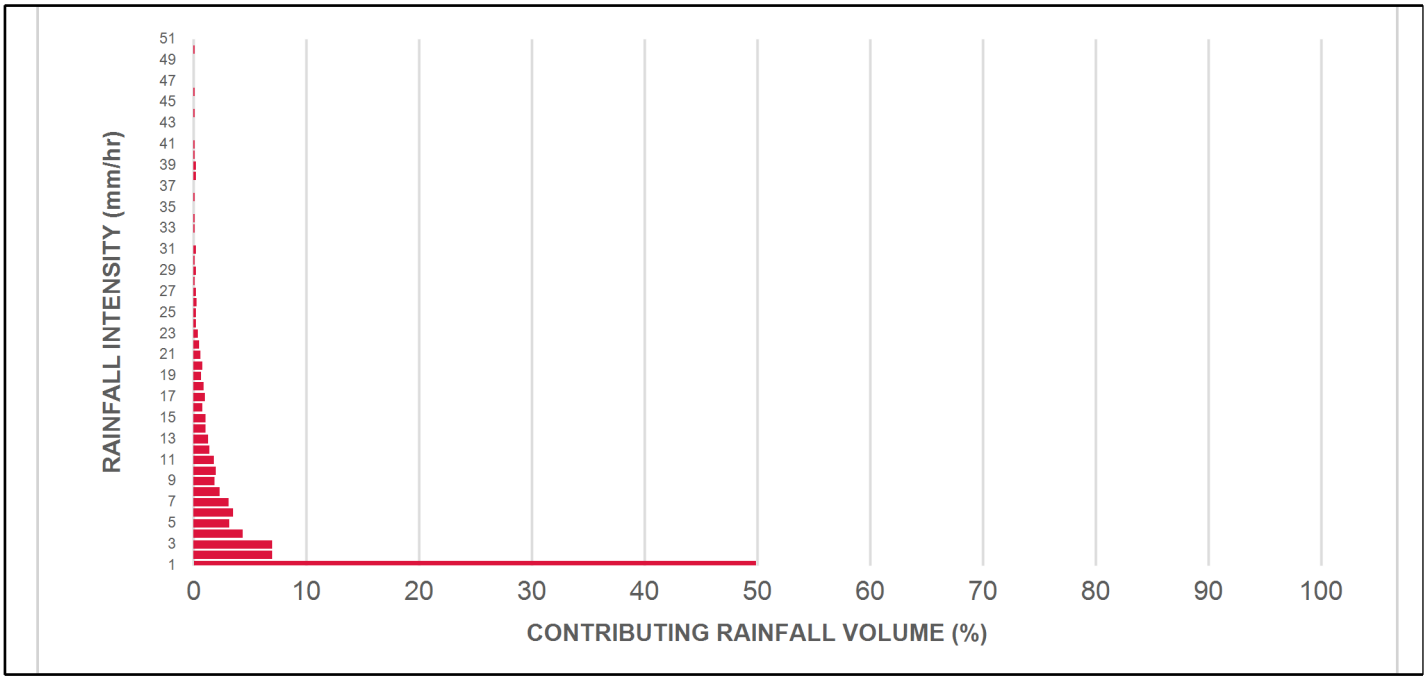

INCREMENTAL AND CUMULATIVE TSS REMOVAL FOR THE RECOMMENDED STORMCEPTOR® MODEL

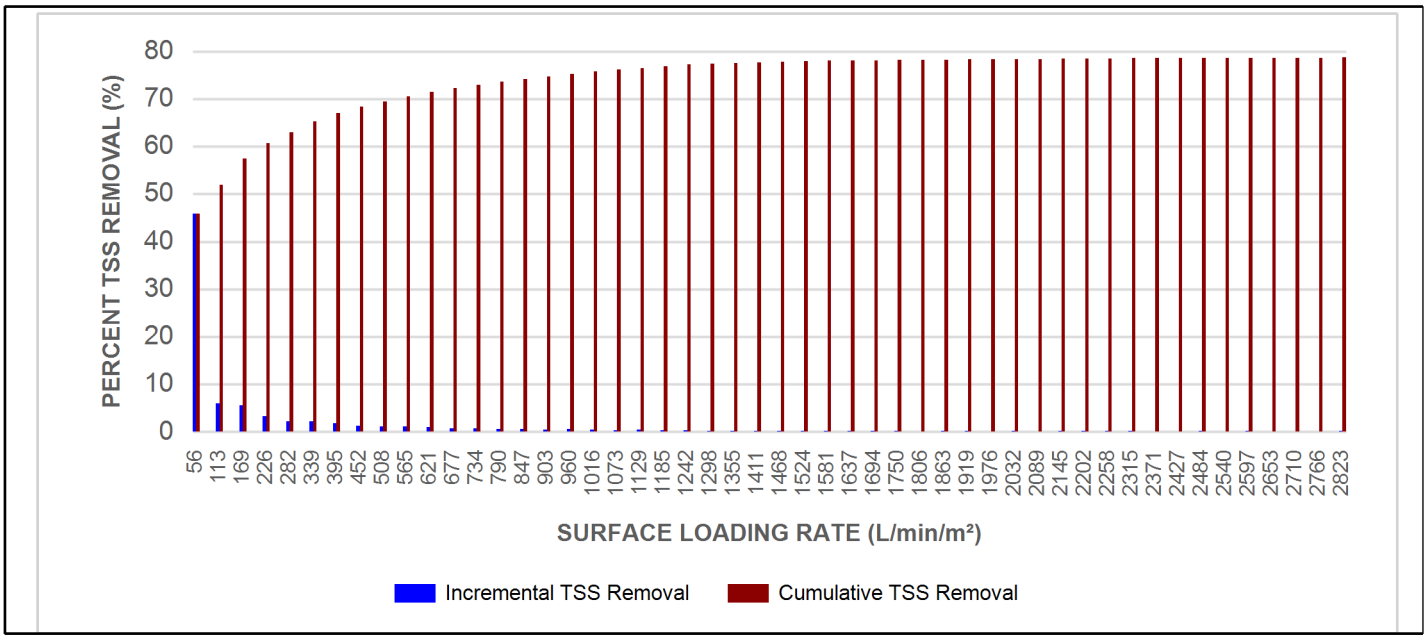

imbrium

Maximum Pipe Diameter / Peak Conveyance

Stormceptor EF / EFO	Model Diameter		Min Angle Inlet / Outlet Pipes	Max Inlet Pipe Diameter		Max Outlet Pipe Diameter		Peak Conveyance Flow Rate	
	(m)	(ft)		(mm)	(in)	(mm)	(in)	(L/s)	(cfs)
EF4 / EFO4	1.2	4	90	609	24	609	24	425	15
EF6 / EFO6	1.8	6	90	914	36	914	36	990	35
EF8 / EFO8	2.4	8	90	1219	48	1219	48	1700	60
EF10 / EFO10	3.0	10	90	1828	72	1828	72	2830	100
EF12 / EFO12	3.6	12	90	1828	72	1828	72	2830	100

SCOUR PREVENTION AND ONLINE CONFIGURATION

►**Stormceptor® EF and EFO** feature an internal bypass and superior scour prevention technology that have been demonstrated in third-party testing according to the scour testing provisions of the Canadian ETV **Procedure for Laboratory Testing of Oil-Grit Separators**, and the exceptional scour test performance has been third-party verified in accordance with the ISO 14034 ETV protocol. As a result, Stormceptor EF and EFO are approved for online installation, eliminating the need for costly additional bypass structures, piping, and installation expense.

DESIGN FLEXIBILITY

►**Stormceptor® EF** and **EFO** offers design flexibility in one simplified platform, accepting stormwater flow from a single inlet pipe or multiple inlet pipes, and/or surface runoff through an inlet grate. The device can also serve as a junction structure, accommodate a 90-degree inlet-to-outlet bend angle, and can be modified to ensure performance in submerged conditions.

OIL CAPTURE AND RETENTION

►While Stormceptor® EF will capture and retain oil from dry weather spills and low intensity runoff, **Stormceptor® EFO** has demonstrated superior oil capture and greater than 99% oil retention in third-party testing according to the light liquid re-entrainment testing provisions of the Canadian ETV **Procedure for Laboratory Testing of Oil-Grit Separators**. Stormceptor EFO is recommended for sites where oil capture and retention is a requirement.

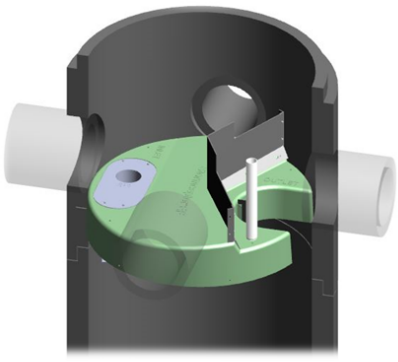

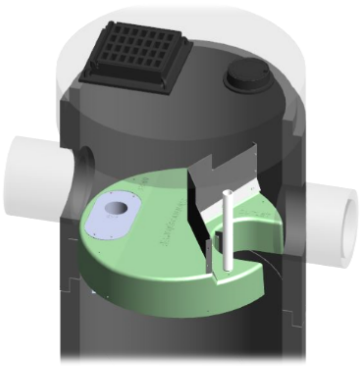

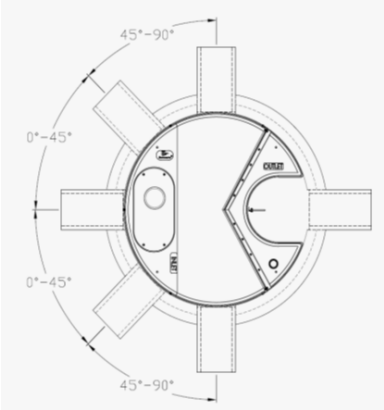

INLET-TO-OUTLET DROP

Elevation differential between inlet and outlet pipe inverts is dictated by the angle at which the inlet pipe(s) enters the unit.

0° - 45° : The inlet pipe is 1-inch (25mm) higher than the outlet pipe.

45° - 90° : The inlet pipe is 2-inches (50mm) higher than the outlet pipe.

HEAD LOSS

The head loss through Stormceptor EF is similar to that of a 60-degree bend structure. The applicable K value for calculating minor losses through the unit is 1.1. For submerged conditions the applicable K value is 3.0.

Pollutant Capacity

Stormceptor EF / EFO	Model Diameter		Depth (Outlet Pipe Invert to Sump Floor)		Oil Volume		Recommended Sediment Maintenance Depth *		Maximum Sediment Volume *		Maximum Sediment Mass **	
	(m)	(ft)	(m)	(ft)	(L)	(Gal)	(mm)	(in)	(L)	(ft^3)	(kg)	(lb)
EF4 / EFO4	1.2	4	1.52	5.0	265	70	203	8	1190	42	1904	5250
EF6 / EFO6	1.8	6	1.93	6.3	610	160	305	12	3470	123	5552	15375
EF8 / EFO8	2.4	8	2.59	8.5	1070	280	610	24	8780	310	14048	38750
EF10 / EFO10	3.0	10	3.25	10.7	1670	440	610	24	17790	628	28464	78500
EF12 / EFO12	3.6	12	3.89	12.8	2475	655	610	24	31220	1103	49952	137875

*Increased sump depth may be added to increase sediment storage capacity

** Average density of wet packed sediment in sump = 1.6 kg/L (100 lb/ft^3)

Feature	Benefit	Feature Appeals To
Patent-pending enhanced flow treatment and scour prevention technology	Superior, verified third-party performance	Regulator, Specifying & Design Engineer
Third-party verified light liquid capture and retention for EFO version	Proven performance for fuel/oil hotspot locations	Regulator, Specifying & Design Engineer, Site Owner
Functions as bend, junction or inlet structure	Design flexibility	Specifying & Design Engineer
Minimal drop between inlet and outlet	Site installation ease	Contractor
Large diameter outlet riser for inspection and maintenance	Easy maintenance access from grade	Maintenance Contractor & Site Owner

STANDARD STORMCEPTOR EF/EFO DRAWINGS

For standard details, please visit http://www.imbriumsystems.com/stormwater-treatment-solutions/stormceptor-ef

STANDARD STORMCEPTOR EF/EFO SPECIFICATION

For specifications, please visit http://www.imbriumsystems.com/stormwater-treatment-solutions/stormceptor-ef

imbrium

STANDARD PERFORMANCE SPECIFICATION FOR "OIL GRIT SEPARATOR" (OGS) STORMWATER QUALITY TREATMENT DEVICE

PART 1 – GENERAL

1.1 WORK INCLUDED

This section specifies requirements for selecting, sizing, and designing an underground Oil Grit Separator (OGS) device for stormwater quality treatment, with third-party testing results and a Statement of Verification in accordance with ISO 14034 Environmental Management – Environmental Technology Verification (ETV).

1.2 REFERENCE STANDARDS & PROCEDURES

ISO 14034:2016 Environmental management – Environmental technology verification (ETV)

Canadian Environmental Technology Verification (ETV) Program's **Procedure for Laboratory Testing of Oil-Grit Separators.**

1.3 SUBMITTALS

1.3.1 All submittals, including sizing reports & shop drawings, shall be submitted upon request with each order to the contractor then forwarded to the Engineer of Record for review and acceptance. Shop drawings shall detail all OGS components, elevations, and sequence of construction.

1.3.2 Alternative devices shall have features identical to or greater than the specified device, including: treatment chamber diameter, treatment chamber wet volume, sediment storage volume, and oil storage volume.

1.3.3 Unless directed otherwise by the Engineer of Record, OGS stormwater quality treatment product substitutions or alternatives submitted within ten days prior to project bid shall not be accepted. All alternatives or substitutions submitted shall be signed and sealed by a local registered Professional Engineer, based on the exact same criteria detailed in Section 3, in entirety, subject to review and approval by the Engineer of Record.

PART 2 – PRODUCTS

2.1 OGS POLLUTANT STORAGE

The OGS device shall include a sump for sediment storage, and a protected volume for the capture and storage of petroleum hydrocarbons and buoyant gross pollutants. The **minimum** sediment & petroleum hydrocarbon storage capacity shall be as follows:

2.1.1

4 ft (1219 mm) Diameter OGS Units:	1.19 m^3 sediment / 265 L oil
6 ft (1829 mm) Diameter OGS Units:	3.48 m^3 sediment / 609 L oil
8 ft (2438 mm) Diameter OGS Units:	8.78 m^3 sediment / 1,071 L oil
10 ft (3048 mm) Diameter OGS Units:	17.78 m^3 sediment / 1,673 L oil
12 ft (3657 mm) Diameter OGS Units:	31.23 m^3 sediment / 2,476 L oil

PART 3 – PERFORMANCE & DESIGN

3.1 GENERAL

The OGS stormwater quality treatment device shall be verified in accordance with ISO 14034:2016 Environmental management – Environmental technology verification (ETV). The OGS stormwater quality treatment device shall remove oil, sediment and gross pollutants from stormwater runoff during frequent wet weather events, and retain these pollutants during less frequent high flow wet weather events below the insert within the OGS for later removal during maintenance. The Manufacturer shall have at least ten (10) years of local experience, history and success in engineering design, manufacturing and production and supply of OGS stormwater quality treatment device systems, acceptable to the Engineer of Record.

3.2 SIZING METHODOLOGY

The OGS device shall be engineered, designed and sized to provide stormwater quality treatment based on treating a minimum of 90 percent of the average annual runoff volume and a minimum removal of an annual average 60% of the sediment (TSS) load based on the Particle Size Distribution (PSD) specified in the sizing report for the specified device. Sizing shall be determined using historical rainfall data and a sediment removal performance curve derived from the actual third-party verified laboratory testing data. The OGS device shall also have sufficient annual sediment storage capacity as specified and calculated in Section 2.1.

3.3 CANADIAN ETV or ISO 14034 ETV VERIFICATION OF SCOUR TESTING

The OGS device shall have Canadian ETV or ISO 14034 ETV Verification of third-party scour testing conducted in accordance with the Canadian ETV Program's **Procedure for Laboratory Testing of Oil-Grit Separators.**

3.3.1 To be acceptable for on-line installation, the OGS device must demonstrate an average scour test effluent concentration less than 10 mg/L at each surface loading rate tested, up to and including 2600 L/min/m^2.

Appendix B

MIDUSS Output

Pre-Development

```
 1 "                MIDUSS Output ------------------------------------------------>"
 2 "                MIDUSS version                          Version 2.25  rev. 473"
 3 "                MIDUSS created                        Sunday, February 7, 2010"
 4 "           10   Units used:                                          ie METRIC"
 5 "                Job folder:                                      Q:\47850\100"
 6 "                Output filename:                                 5 yr pre.out"
 7 "                Licensee name:                                              A"
 8 "                Company                                                     "
 9 "                Date & Time last used:                8/25/2020 at 3:03:48 PM"
10 " 31          TIME PARAMETERS"
11 "        5.000   Time Step"
12 "      180.000   Max. Storm length"
13 "     1500.000   Max. Hydrograph"
14 " 32          STORM Chicago storm"
15 "            1   Chicago storm"
16 "     1755.000   Coefficient A"
17 "       12.347   Constant B"
18 "        0.895   Exponent C"
19 "        0.400   Fraction R"
20 "      180.000   Duration"
21 "        1.000   Time step multiplier"
22 "             Maximum intensity          136.512    mm/hr"
23 "             Total depth                 47.549    mm"
24 "            6   005hyd   Hydrograph extension used in this file"
25 " 33          CATCHMENT 101"
26 "            1   Triangular SCS"
27 "            1   Equal length"
28 "            1   SCS method"
29 "          101   Total Site"
30 "       39.000   % Impervious"
31 "        1.750   Total Area"
32 "       80.000   Flow length"
33 "        3.000   Overland Slope"
34 "        1.067   Pervious Area"
35 "       80.000   Pervious length"
36 "        3.000   Pervious slope"
37 "        0.683   Impervious Area"
38 "       80.000   Impervious length"
39 "        3.000   Impervious slope"
40 "        0.250   Pervious Manning 'n'"
41 "       75.000   Pervious SCS Curve No."
42 "        0.260   Pervious Runoff coefficient"
43 "        0.100   Pervious Ia/S coefficient"
44 "        8.467   Pervious Initial abstraction"
45 "        0.015   Impervious Manning 'n'"
46 "       98.000   Impervious SCS Curve No."
47 "        0.874   Impervious Runoff coefficient"
48 "        0.100   Impervious Ia/S coefficient"
49 "        0.518   Impervious Initial abstraction"
50 "                     0.192     0.000     0.000     0.000 c.m/sec"
51 "             Catchment 101          Pervious   Impervious Total Area "
52 "             Surface Area           1.067      0.683      1.750      hectare"
53 "             Time of concentration  30.674     3.183      11.899     minutes"
54 "             Time to Centroid       135.326    90.449     104.676    minutes"
55 "             Rainfall depth         47.549     47.549     47.549     mm"
56 "             Rainfall volume        507.59     324.52     832.11     c.m"
57 "             Rainfall losses        35.209     5.968      23.805     mm"
58 "             Runoff depth           12.340     41.581     23.744     mm"
59 "             Runoff volume          131.73     283.79     415.52     c.m"
60 "             Runoff coefficient     0.260      0.874      0.499      "
61 "             Maximum flow           0.034      0.186      0.192      c.m/sec"
62 " 40          HYDROGRAPH Add Runoff "
63 "            4   Add Runoff "
64 "                     0.192     0.192     0.000     0.000"
65 " 38          START/RE-START TOTALS 101"
66 "            3   Runoff Totals on EXIT"
67 "             Total Catchment area                    1.750    hectare"
68 "             Total Impervious area                   0.683    hectare"
69 "             Total % impervious                     39.000"
70 " 19          EXIT"
```

```
 1 "               MIDUSS Output ------------------------------------------------>"
 2 "               MIDUSS version                          Version 2.25  rev. 473"
 3 "               MIDUSS created                        Sunday, February 7, 2010"
 4 "          10   Units used:                                          ie METRIC"
 5 "               Job folder:                                     Q:\47850\100"
 6 "               Output filename:                               100 yr pre.out"
 7 "               Licensee name:                                              A"
 8 "               Company                                                     "
 9 "               Date & Time last used:                8/27/2020 at 10:30:40 AM"
10 " 31          TIME PARAMETERS"
11 "        5.000   Time Step"
12 "      180.000   Max. Storm length"
13 "     1500.000   Max. Hydrograph"
14 " 32          STORM Chicago storm"
15 "            1   Chicago storm"
16 "     4692.000   Coefficient A"
17 "       17.437   Constant B"
18 "        0.956   Exponent C"
19 "        0.400   Fraction R"
20 "      180.000   Duration"
21 "        1.000   Time step multiplier"
22 "             Maximum intensity          239.793    mm/hr"
23 "             Total depth                 89.960    mm"
24 "            6   100hyd   Hydrograph extension used in this file"
25 " 33          CATCHMENT 101"
26 "            1   Triangular SCS"
27 "            1   Equal length"
28 "            1   SCS method"
29 "          101   Total Site"
30 "       39.000   % Impervious"
31 "        1.750   Total Area"
32 "       80.000   Flow length"
33 "        3.000   Overland Slope"
34 "        1.067   Pervious Area"
35 "       80.000   Pervious length"
36 "        3.000   Pervious slope"
37 "        0.683   Impervious Area"
38 "       80.000   Impervious length"
39 "        3.000   Impervious slope"
40 "        0.250   Pervious Manning 'n'"
41 "       75.000   Pervious SCS Curve No."
42 "        0.444   Pervious Runoff coefficient"
43 "        0.100   Pervious Ia/S coefficient"
44 "        8.467   Pervious Initial abstraction"
45 "        0.015   Impervious Manning 'n'"
46 "       98.000   Impervious SCS Curve No."
47 "        0.922   Impervious Runoff coefficient"
48 "        0.100   Impervious Ia/S coefficient"
49 "        0.518   Impervious Initial abstraction"
50 "                    0.396     0.000     0.000     0.000 c.m/sec"
51 "             Catchment 101          Pervious   Impervious Total Area "
52 "             Surface Area           1.067      0.683      1.750      hectare"
53 "             Time of concentration  18.632     2.510      9.433      minutes"
54 "             Time to Centroid       116.490    87.552     99.979     minutes"
55 "             Rainfall depth         89.960     89.960     89.960     mm"
56 "             Rainfall volume        960.32     613.98     1574.30    c.m"
57 "             Rainfall losses        50.039     6.998      33.253     mm"
58 "             Runoff depth           39.921     82.962     56.707     mm"
59 "             Runoff volume          426.16     566.22     992.38     c.m"
60 "             Runoff coefficient     0.444      0.922      0.630      "
61 "             Maximum flow           0.158      0.369      0.396      c.m/sec"
62 " 40          HYDROGRAPH Add Runoff "
63 "            4   Add Runoff "
64 "                    0.396     0.396     0.000     0.000"
65 " 38          START/RE-START TOTALS 101"
66 "            3   Runoff Totals on EXIT"
67 "             Total Catchment area                    1.750    hectare"
68 "             Total Impervious area                   0.683    hectare"
69 "             Total % impervious                     39.000"
70 " 19          EXIT"
```

Post-Development



```
 1 "                MIDUSS Output ------------------------------------------------>"
 2 "                MIDUSS version                              Version 2.25  rev. 473"
 3 "                MIDUSS created                            Sunday, February 7, 2010"
 4 "           10   Units used:                                                ie METRIC"
 5 "                Job folder:                                            Q:\47850\100"
 6 "                Output filename:                          5 yr post_controls b.out"
 7 "                Licensee name:                                                  A"
 8 "                Company                                                         "
 9 "                Date & Time last used:                   9/29/2020 at 9:14:44 AM"
10 " 31          TIME PARAMETERS"
11 "        5.000   Time Step"
12 "      180.000   Max. Storm length"
13 "     1500.000   Max. Hydrograph"
14 " 32          STORM Chicago storm"
15 "            1   Chicago storm"
16 "     1755.000   Coefficient A"
17 "       12.347   Constant B"
18 "        0.895   Exponent C"
19 "        0.400   Fraction R"
20 "      180.000   Duration"
21 "        1.000   Time step multiplier"
22 "             Maximum intensity          136.512    mm/hr"
23 "             Total depth                 47.549    mm"
24 "            6   005hyd   Hydrograph extension used in this file"
25 " 33          CATCHMENT 201"
26 "            1   Triangular SCS"
27 "            1   Equal length"
28 "            1   SCS method"
29 "          201   Controlled"
30 "       65.000   % Impervious"
31 "        1.290   Total Area"
32 "       50.000   Flow length"
33 "        3.000   Overland Slope"
34 "        0.451   Pervious Area"
35 "       50.000   Pervious length"
36 "        3.000   Pervious slope"
37 "        0.838   Impervious Area"
38 "       50.000   Impervious length"
39 "        3.000   Impervious slope"
40 "        0.250   Pervious Manning 'n'"
41 "       75.000   Pervious SCS Curve No."
42 "        0.259   Pervious Runoff coefficient"
43 "        0.100   Pervious Ia/S coefficient"
44 "        8.467   Pervious Initial abstraction"
45 "        0.015   Impervious Manning 'n'"
46 "       98.000   Impervious SCS Curve No."
47 "        0.876   Impervious Runoff coefficient"
48 "        0.100   Impervious Ia/S coefficient"
49 "        0.518   Impervious Initial abstraction"
50 "                     0.245     0.000     0.000     0.000 c.m/sec"
51 "             Catchment 201          Pervious   Impervious Total Area "
52 "             Surface Area           0.451      0.838      1.290      hectare"
53 "             Time of concentration  23.137     2.401      5.253      minutes"
54 "             Time to Centroid       126.123    89.251     94.322     minutes"
55 "             Rainfall depth         47.549     47.549     47.549     mm"
56 "             Rainfall volume        214.68     398.70     613.38     c.m"
57 "             Rainfall losses        35.219     5.915      16.171     mm"
58 "             Runoff depth           12.331     41.634     31.378     mm"
59 "             Runoff volume          55.67      349.11     404.78     c.m"
60 "             Runoff coefficient     0.259      0.876      0.660      "
61 "             Maximum flow           0.017      0.244      0.245      c.m/sec"
62 " 40          HYDROGRAPH Add Runoff "
63 "            4   Add Runoff "
64 "                     0.245     0.245     0.000     0.000"
65 " 54          POND DESIGN"
66 "        0.245   Current peak flow    c.m/sec"
67 "        0.004   Target outflow    c.m/sec"
68 "        404.8   Hydrograph volume    c.m"
69 "           9.   Number of stages"
70 "      340.420   Minimum water level    metre"
71 "      342.420   Maximum water level    metre"
```

```
 72 "      340.420   Starting water level    metre"
 73 "            0   Keep Design Data: 1 = True; 0 = False"
 74 "                  Level Discharge    Volume"
 75 "                340.420     0.000     0.000"
 76 "                341.720   0.09469    0.5000"
 77 "                341.820   0.09867     4.490"
 78 "                341.920    0.1025    14.600"
 79 "                342.020    0.1062    29.170"
 80 "                342.120    0.1097    47.530"
 81 "                342.220    0.1132    69.010"
 82 "                342.320    0.1165    99.190"
 83 "                342.420    0.3139   300.000"
 84 "           1.   WEIRS"
 85 "                  Crest      Weir     Crest      Left     Right"
 86 "              elevation coefficie   breadth sideslope sideslope"
 87 "                342.320     0.900     4.000     0.000     0.000"
 88 "           1.   ORIFICES"
 89 "                Orifice   Orifice   Orifice Number of"
 90 "                 invert coefficie  diameter  orifices"
 91 "                340.420     0.630    0.2000     1.000"
 92 "             Peak outflow                 0.114    c.m/sec"
 93 "             Maximum level              342.247    metre"
 94 "             Maximum storage             77.025    c.m"
 95 "             Centroidal lag               1.620   hours"
 96 "                  0.245     0.245     0.114     0.000 c.m/sec"
 97 " 40          HYDROGRAPH   Combine    1"
 98 "            6   Combine "
 99 "            1   Node #"
100 "                Total Site"
101 "             Maximum flow                 0.114    c.m/sec"
102 "             Hydrograph volume          379.218    c.m"
103 "                    0.245     0.245     0.114     0.114"
104 " 40          HYDROGRAPH Start - New Tributary"
105 "            2   Start - New Tributary"
106 "                    0.245     0.000     0.114     0.114"
107 " 33          CATCHMENT 202"
108 "            1   Triangular SCS"
109 "            1   Equal length"
110 "            1   SCS method"
111 "          202   Uncontrolled"
112 "       38.000   % Impervious"
113 "        0.460   Total Area"
114 "       40.000   Flow length"
115 "        3.000   Overland Slope"
116 "        0.285   Pervious Area"
117 "       40.000   Pervious length"
118 "        3.000   Pervious slope"
119 "        0.175   Impervious Area"
120 "       40.000   Impervious length"
121 "        3.000   Impervious slope"
122 "        0.250   Pervious Manning 'n'"
123 "       75.000   Pervious SCS Curve No."
124 "        0.259   Pervious Runoff coefficient"
125 "        0.100   Pervious Ia/S coefficient"
126 "        8.467   Pervious Initial abstraction"
127 "        0.015   Impervious Manning 'n'"
128 "       98.000   Impervious SCS Curve No."
129 "        0.878   Impervious Runoff coefficient"
130 "        0.100   Impervious Ia/S coefficient"
131 "        0.518   Impervious Initial abstraction"
132 "                    0.053     0.000     0.114     0.114 c.m/sec"
133 "             Catchment 202          Pervious   Impervious Total Area "
134 "             Surface Area           0.285      0.175      0.460      hectare"
135 "             Time of concentration  20.238     2.100      7.996      minutes"
136 "             Time to Centroid       122.581    88.774     99.763     minutes"
137 "             Rainfall depth         47.549     47.549     47.549     mm"
138 "             Rainfall volume        135.61     83.12      218.73     c.m"
139 "             Rainfall losses        35.219     5.778      24.031     mm"
140 "             Runoff depth           12.330     41.771     23.518     mm"
141 "             Runoff volume          35.17      73.02      108.18     c.m"
142 "             Runoff coefficient     0.259      0.878      0.495      "
```

```
143 "             Maximum flow           0.012      0.052      0.053      c.m/sec"
144 " 40          HYDROGRAPH Add Runoff "
145 "            4   Add Runoff "
146 "                    0.053     0.053     0.114     0.114"
147 " 40          HYDROGRAPH Copy to Outflow"
148 "            8   Copy to Outflow"
149 "                    0.053     0.053     0.053     0.114"
150 " 40          HYDROGRAPH   Combine    1"
151 "            6   Combine "
152 "            1   Node #"
153 "                Total Site"
154 "             Maximum flow                  0.159    c.m/sec"
155 "             Hydrograph volume           487.401    c.m"
156 "                    0.053     0.053     0.053     0.159"
157 " 40          HYDROGRAPH   Confluence    1"
158 "            7   Confluence "
159 "            1   Node #"
160 "                Total Site"
161 "             Maximum flow                  0.159    c.m/sec"
162 "             Hydrograph volume           487.401    c.m"
163 "                    0.053     0.159     0.053     0.000"
164 " 38          START/RE-START TOTALS 1"
165 "            3   Runoff Totals on EXIT"
166 "             Total Catchment area                     1.750    hectare"
167 "             Total Impervious area                    1.013    hectare"
168 "             Total % impervious                      57.903"
169 " 19          EXIT"
```

```
 1 "                MIDUSS Output ------------------------------------------------>"
 2 "                MIDUSS version                              Version 2.25  rev. 473"
 3 "                MIDUSS created                            Sunday, February 7, 2010"
 4 "           10   Units used:                                                ie METRIC"
 5 "                Job folder:                                             Q:\47850\100"
 6 "                Output filename:                       100 yr post_controls b.out"
 7 "                Licensee name:                                                  A"
 8 "                Company                                                         "
 9 "                Date & Time last used:                   9/29/2020 at 9:09:58 AM"
10 " 31          TIME PARAMETERS"
11 "        5.000   Time Step"
12 "      180.000   Max. Storm length"
13 "     1500.000   Max. Hydrograph"
14 " 32          STORM Chicago storm"
15 "            1   Chicago storm"
16 "     4692.000   Coefficient A"
17 "       17.437   Constant B"
18 "        0.956   Exponent C"
19 "        0.400   Fraction R"
20 "      180.000   Duration"
21 "        1.000   Time step multiplier"
22 "             Maximum intensity          239.793    mm/hr"
23 "             Total depth                 89.960    mm"
24 "            6   100hyd   Hydrograph extension used in this file"
25 " 33          CATCHMENT 201"
26 "            1   Triangular SCS"
27 "            1   Equal length"
28 "            1   SCS method"
29 "          201   Controlled"
30 "       65.000   % Impervious"
31 "        1.290   Total Area"
32 "       50.000   Flow length"
33 "        3.000   Overland Slope"
34 "        0.451   Pervious Area"
35 "       50.000   Pervious length"
36 "        3.000   Pervious slope"
37 "        0.838   Impervious Area"
38 "       50.000   Impervious length"
39 "        3.000   Impervious slope"
40 "        0.250   Pervious Manning 'n'"
41 "       75.000   Pervious SCS Curve No."
42 "        0.443   Pervious Runoff coefficient"
43 "        0.100   Pervious Ia/S coefficient"
44 "        8.467   Pervious Initial abstraction"
45 "        0.015   Impervious Manning 'n'"
46 "       98.000   Impervious SCS Curve No."
47 "        0.927   Impervious Runoff coefficient"
48 "        0.100   Impervious Ia/S coefficient"
49 "        0.518   Impervious Initial abstraction"
50 "                     0.483     0.000     0.000     0.000 c.m/sec"
51 "             Catchment 201          Pervious   Impervious Total Area "
52 "             Surface Area           0.451      0.838      1.290      hectare"
53 "             Time of concentration  14.053     1.893      4.382      minutes"
54 "             Time to Centroid       110.772    86.640     91.579     minutes"
55 "             Rainfall depth         89.960     89.960     89.960     mm"
56 "             Rainfall volume        406.17     754.31     1160.48    c.m"
57 "             Rainfall losses        50.081     6.524      21.769     mm"
58 "             Runoff depth           39.879     83.436     68.191     mm"
59 "             Runoff volume          180.06     699.61     879.67     c.m"
60 "             Runoff coefficient     0.443      0.927      0.758      "
61 "             Maximum flow           0.081      0.467      0.483      c.m/sec"
62 " 40          HYDROGRAPH Add Runoff "
63 "            4   Add Runoff "
64 "                     0.483     0.483     0.000     0.000"
65 " 54          POND DESIGN"
66 "        0.483   Current peak flow    c.m/sec"
67 "        0.004   Target outflow    c.m/sec"
68 "        879.7   Hydrograph volume    c.m"
69 "           9.   Number of stages"
70 "      340.420   Minimum water level    metre"
71 "      342.420   Maximum water level    metre"
```

```
 72 "      340.420   Starting water level    metre"
 73 "            0   Keep Design Data: 1 = True; 0 = False"
 74 "                  Level Discharge    Volume"
 75 "                340.420     0.000     0.000"
 76 "                341.720   0.09469    0.5000"
 77 "                341.820   0.09867     4.490"
 78 "                341.920    0.1025    14.600"
 79 "                342.020    0.1062    29.170"
 80 "                342.120    0.1097    47.530"
 81 "                342.220    0.1132    69.010"
 82 "                342.320    0.1165    99.190"
 83 "                342.420    0.3139   300.000"
 84 "           1.   WEIRS"
 85 "                  Crest      Weir     Crest      Left     Right"
 86 "             elevation coefficie   breadth sideslope sideslope"
 87 "                342.320     0.900     4.000     0.000     0.000"
 88 "           1.   ORIFICES"
 89 "                Orifice   Orifice   Orifice Number of"
 90 "                 invert coefficie  diameter  orifices"
 91 "                340.420     0.630    0.2000     1.000"
 92 "             Peak outflow                 0.250    c.m/sec"
 93 "             Maximum level              342.388    metre"
 94 "             Maximum storage            235.536    c.m"
 95 "             Centroidal lag               1.735   hours"
 96 "                  0.483     0.483     0.250     0.000 c.m/sec"
 97 " 40          HYDROGRAPH   Combine    1"
 98 "            6   Combine "
 99 "            1   Node #"
100 "                Total Site"
101 "             Maximum flow                 0.250    c.m/sec"
102 "             Hydrograph volume          897.093    c.m"
103 "                    0.483     0.483     0.250     0.250"
104 " 40          HYDROGRAPH Start - New Tributary"
105 "            2   Start - New Tributary"
106 "                    0.483     0.000     0.250     0.250"
107 " 33          CATCHMENT 202"
108 "            1   Triangular SCS"
109 "            1   Equal length"
110 "            1   SCS method"
111 "          202   Uncontrolled"
112 "       38.000   % Impervious"
113 "        0.460   Total Area"
114 "       40.000   Flow length"
115 "        3.000   Overland Slope"
116 "        0.285   Pervious Area"
117 "       40.000   Pervious length"
118 "        3.000   Pervious slope"
119 "        0.175   Impervious Area"
120 "       40.000   Impervious length"
121 "        3.000   Impervious slope"
122 "        0.250   Pervious Manning 'n'"
123 "       75.000   Pervious SCS Curve No."
124 "        0.443   Pervious Runoff coefficient"
125 "        0.100   Pervious Ia/S coefficient"
126 "        8.467   Pervious Initial abstraction"
127 "        0.015   Impervious Manning 'n'"
128 "       98.000   Impervious SCS Curve No."
129 "        0.927   Impervious Runoff coefficient"
130 "        0.100   Impervious Ia/S coefficient"
131 "        0.518   Impervious Initial abstraction"
132 "                    0.116     0.000     0.250     0.250 c.m/sec"
133 "             Catchment 202          Pervious   Impervious Total Area "
134 "             Surface Area           0.285      0.175      0.460      hectare"
135 "             Time of concentration  12.292     1.656      6.314      minutes"
136 "             Time to Centroid       108.553    86.312     96.052     minutes"
137 "             Rainfall depth         89.960     89.960     89.960     mm"
138 "             Rainfall volume        256.57     157.25     413.82     c.m"
139 "             Rainfall losses        50.115     6.525      33.551     mm"
140 "             Runoff depth           39.845     83.435     56.409     mm"
141 "             Runoff volume          113.64     145.84     259.48     c.m"
142 "             Runoff coefficient     0.443      0.927      0.627      "
```

```
143 "             Maximum flow           0.052      0.099      0.116      c.m/sec"
144 " 40          HYDROGRAPH Add Runoff "
145 "            4   Add Runoff "
146 "                    0.116     0.116     0.250     0.250"
147 " 40          HYDROGRAPH Copy to Outflow"
148 "            8   Copy to Outflow"
149 "                    0.116     0.116     0.116     0.250"
150 " 40          HYDROGRAPH   Combine    1"
151 "            6   Combine "
152 "            1   Node #"
153 "                Total Site"
154 "             Maximum flow                  0.345    c.m/sec"
155 "             Hydrograph volume          1156.575    c.m"
156 "                    0.116     0.116     0.116     0.345"
157 " 40          HYDROGRAPH   Confluence    1"
158 "            7   Confluence "
159 "            1   Node #"
160 "                Total Site"
161 "             Maximum flow                  0.345    c.m/sec"
162 "             Hydrograph volume          1156.575    c.m"
163 "                    0.116     0.345     0.116     0.000"
164 " 38          START/RE-START TOTALS 1"
165 "            3   Runoff Totals on EXIT"
166 "             Total Catchment area                      1.750    hectare"
167 "             Total Impervious area                     1.013    hectare"
168 "             Total % impervious                       57.903"
169 " 19          EXIT"
```